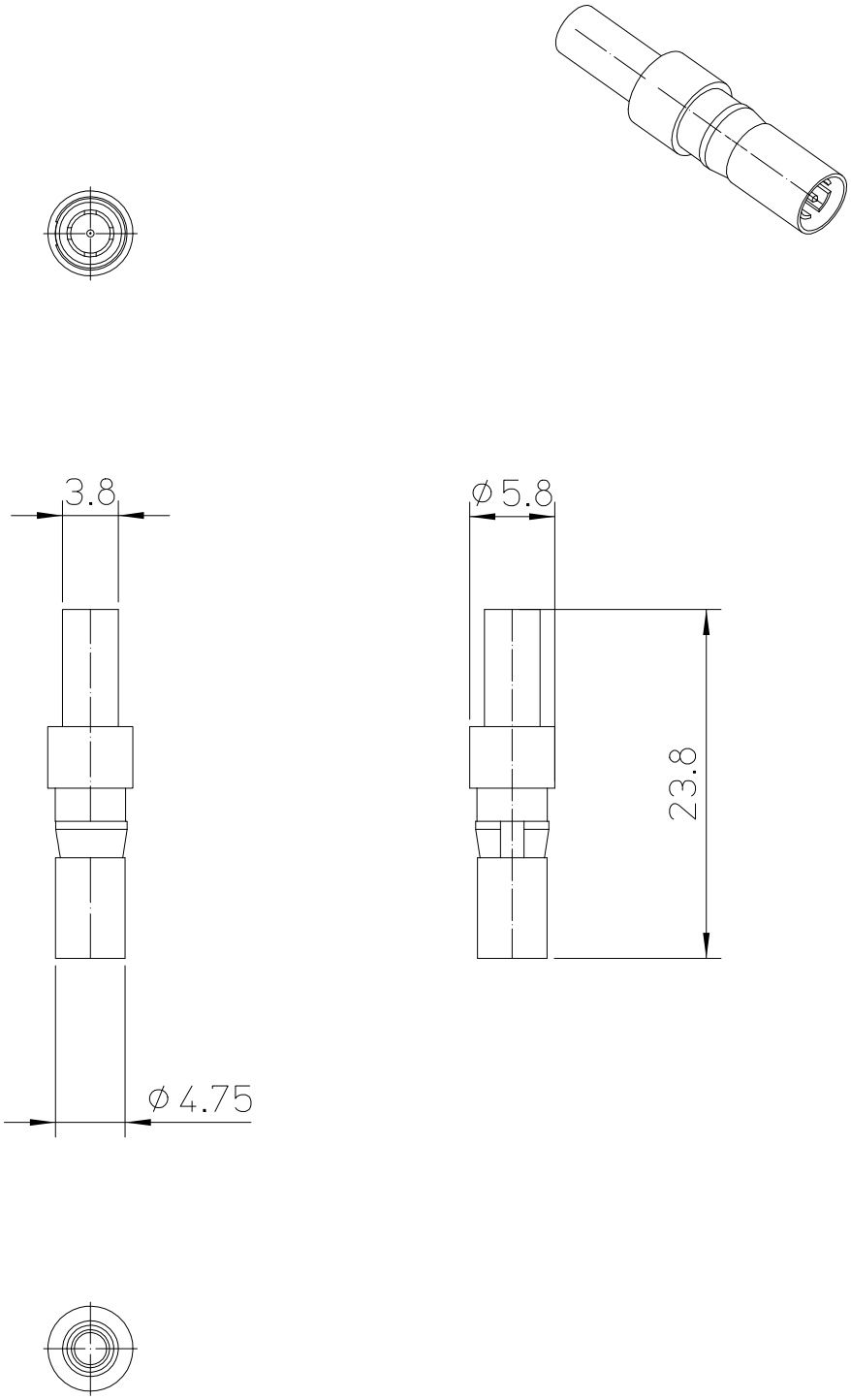

Diritti riservati All rights reserved

dimensions in mm	CX 75 RM	Scale	ILME
Date 14/11/16	Coaxial male contact 75 ohm	2:1	
Sign. C. Mainini			